Trust & Technology

Tongtai

ISO 9001 ISO 14001 CE

A Worldwide Tradition of Quality Products and Customer Service

Inverted Vertical Lathe

TGL-15/20/30

High ■Quality ■Precision ■Efficiency ■Economy

Tongtai Machine & Tool Co.,Ltd.

Excellent Achievement with a
Save floor space with new co

Reasons for Inverted vertical turning cell

TGL-15 . TGL-20 . TGL-30

a Variety of Models.
ompact design.

Features

- **1.Quick Automation.**
- **2.High Cost-Performance.**
- **3.High Chip Disposal Capability.**

TGL-15 Cutting data (S45C)	
O.D. Cutting : 4 x 0.5 (mmxmm/rev)	I.D. Cutting : 5 x 0.3 (mmxmm/rev)
Face Cutting : 4 x 0.5 (mmxmm/rev)	O.D. Grooving : 8 x 0.1 (mmxmm/rev)
I.D. Grooving :8 x 0.1 (mmxmm/rev)	Dirll : ø 25 x 0.3 (mmxmm/rev)
Spindle Power : 7.5/5.5 KW	Spindle Speed: 6000 rpm

Workpiece

Heavy-Duty cutting . H

Structure & Loaderless System

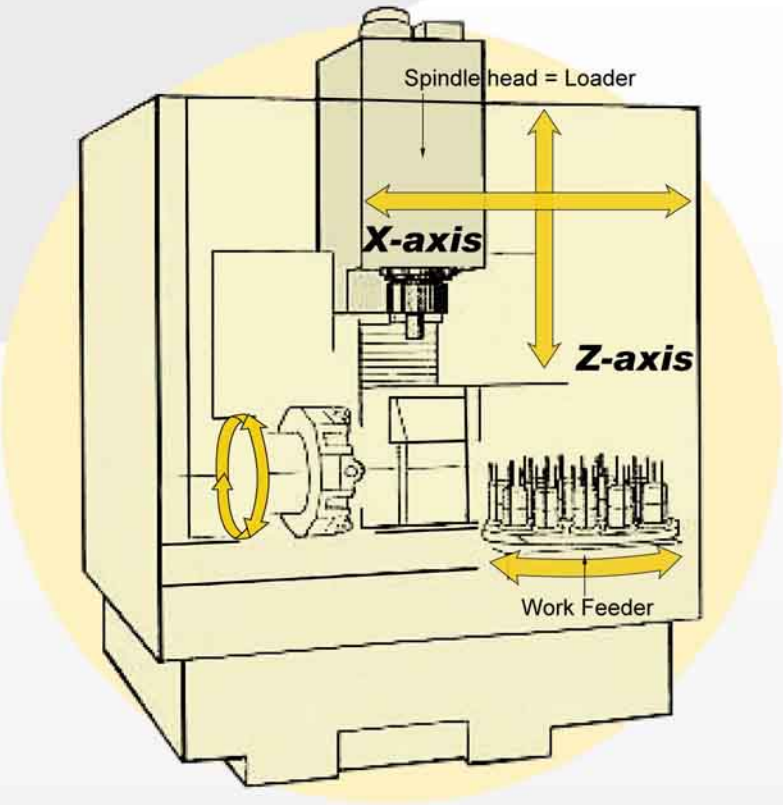

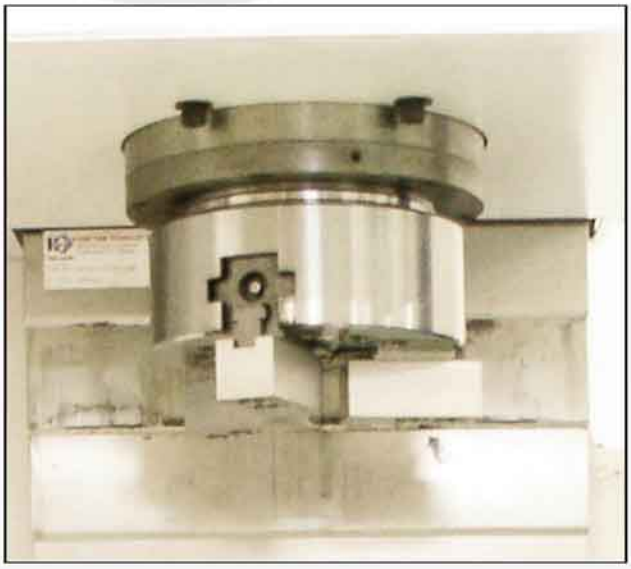

Spindle

Thermo symmetric spindle head structure with less distortion in radial direction and high efficiency low heat spindle motor with advanced control technology are employed.

Loaderless System

Vertical spindle head travels horizontally (X axis) and vertically (Z axis) as if were a loder,and the chuck facing down works as a hand to load and unload workpieces.
(Max. Work Dia. : 100 mm)

Proven hardware ensure high accuracy and high speed operations.

Main specifications

	Unit	TGL-15	TGL-20	TGL-30
▪ Chuck size	inch	6"/(8")	8"	10"/12"
▪ Max. turning dia.	mm	180/(230)	370	500
▪ Max.turning length	mm	100	150	220
▪ Spindle speed	rpm	6000	4500	3500
▪ Motor for spindle	kw	7.5/5.5	18.5/11	30/22
▪ Swing	mm	ø300	ø450	ø650

igh Accuracy

TGL-15/20/30 Feeder Packages for Your Best Choice

Bar Feeder

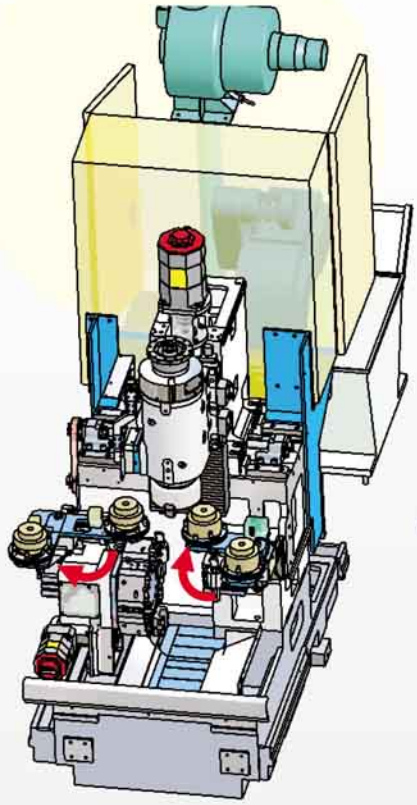

Robot connect with two machines.

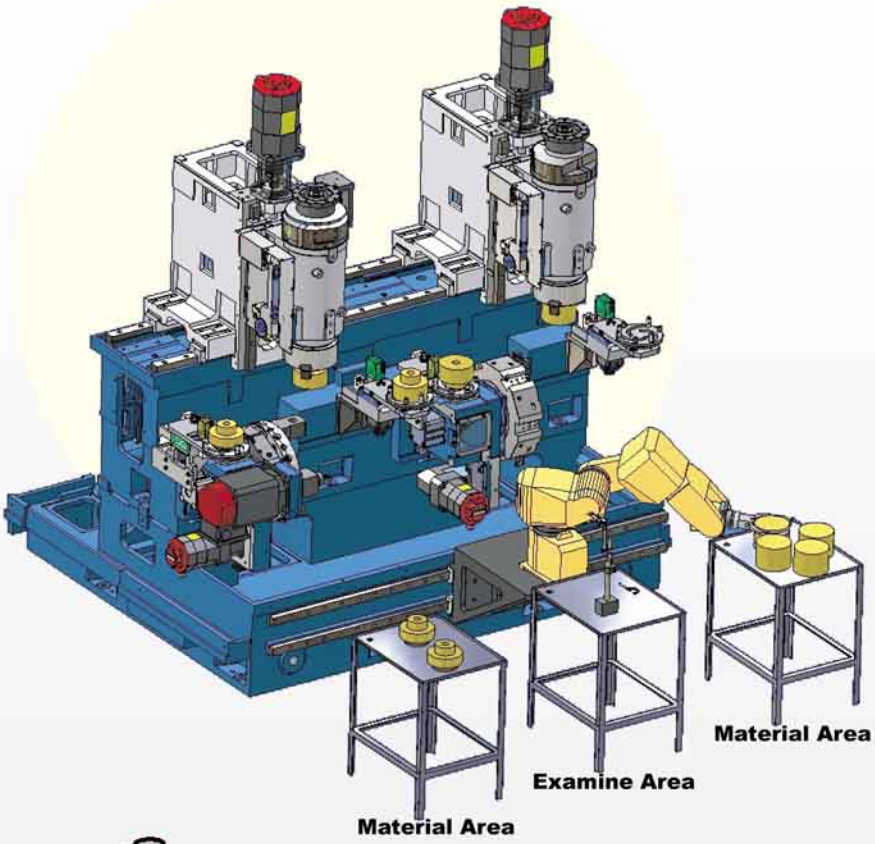

Model of production line

Installing the transfer unit between machines can make up a production line of short cycle time.

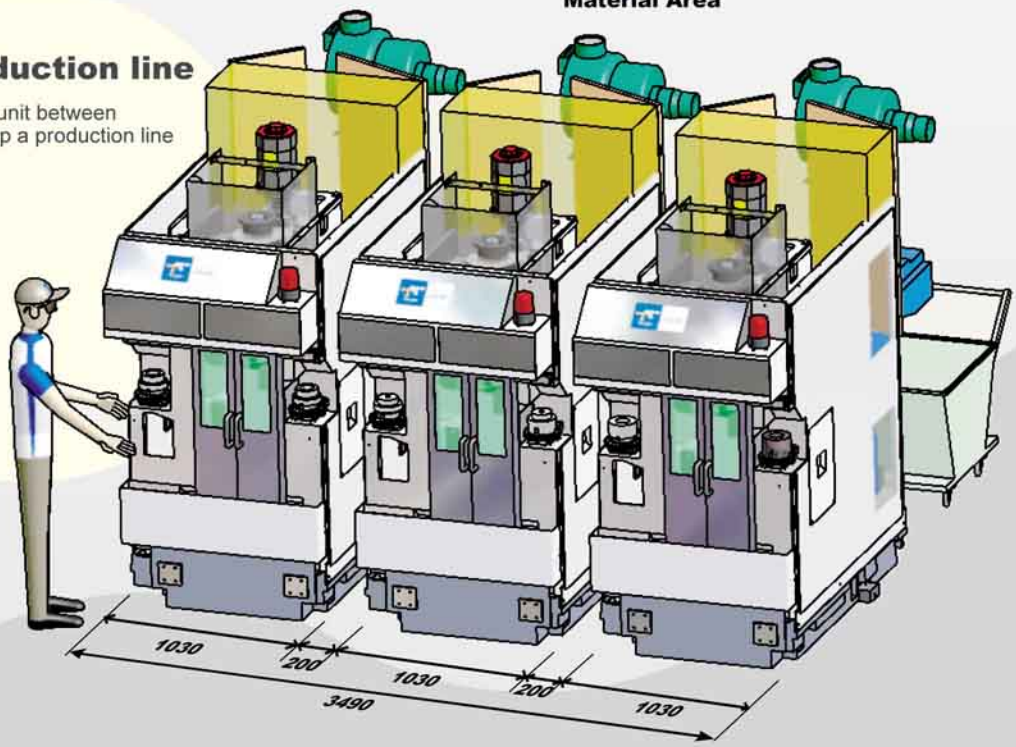

Spindle Head Travel Range

TGL-15/20/30

TGL-15

Max.Turning Dia: Ø100 / Ø150
Max. Machining Dia. of bar: Ø100 / Ø150
Max. Turning Length: 100 mm

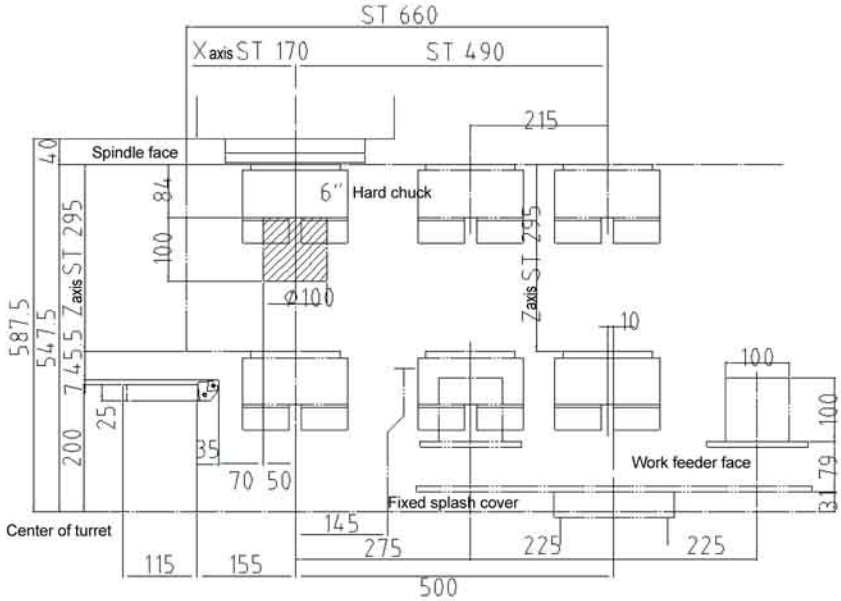

TGL-20

Max.Turning Dia: Ø230
Max. Machining Dia. of bar: Ø200
Max. Turning Length: 150 mm

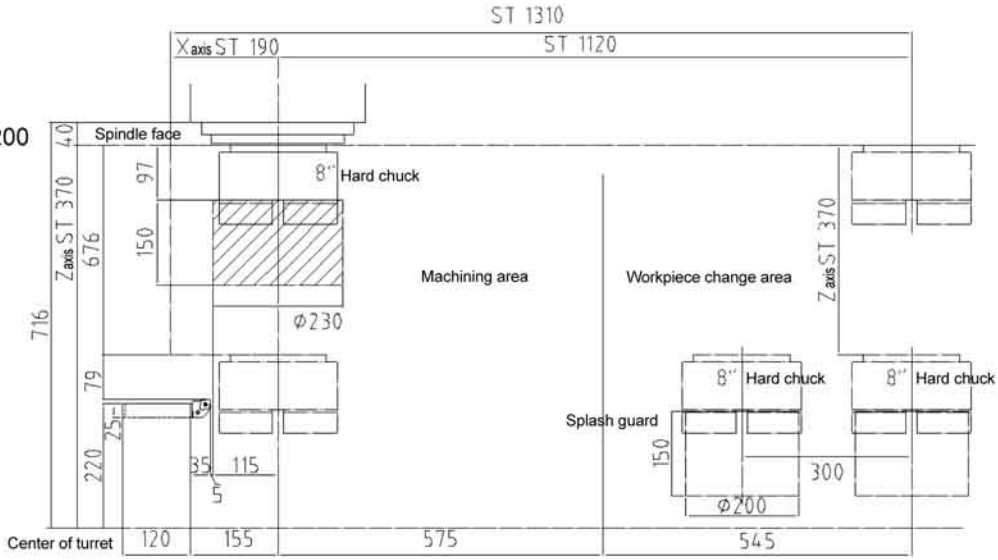

TGL-30

Max.Turning Dia: Ø480
Max. Machining Dia. of bar: Ø300
Max. Turning Length: 220 mm

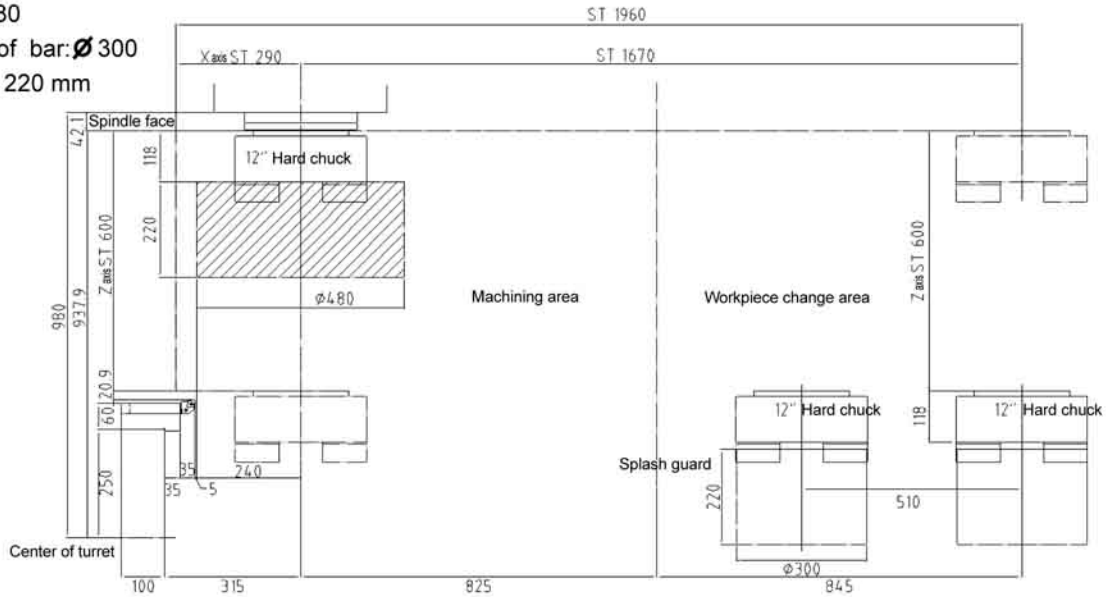

Motor & Layout

TGL-15 Spindle Output Diagram

Spindle power: 7.5/5.5kW (50%ED/Cont.)
Max.speed: 6000min (rpm)

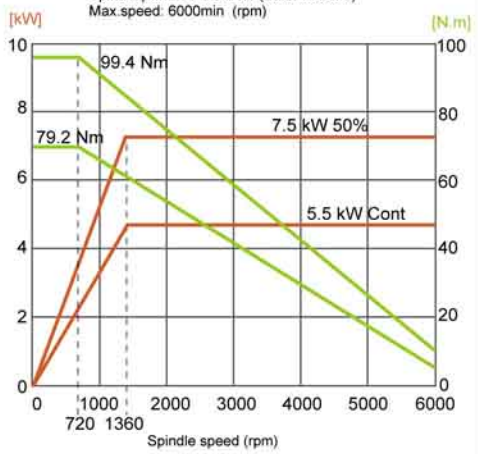

• TGL-15 Layout

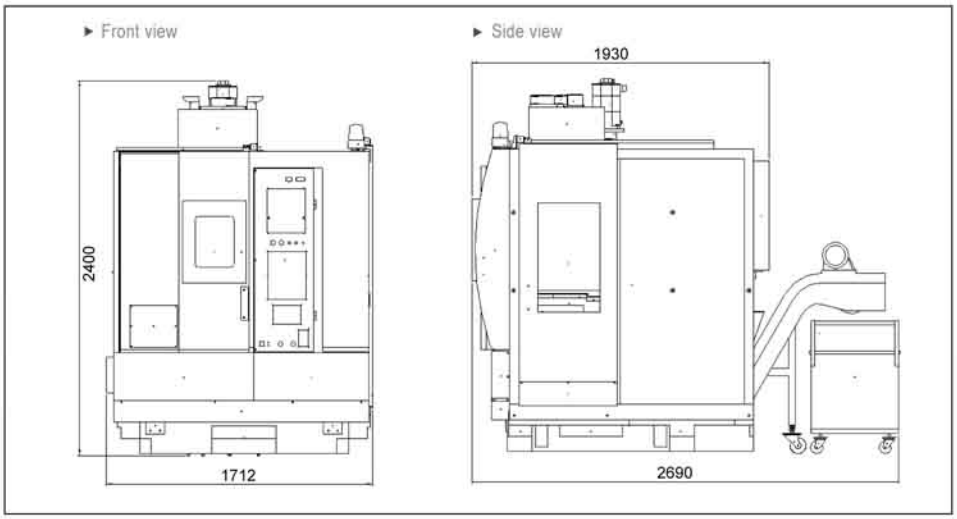

TGL-20 Spindle Output Diagram

Spindle power: 18.5/11kW (50%ED/Cont.)
Max.speed: 4500min (rpm)

High winding

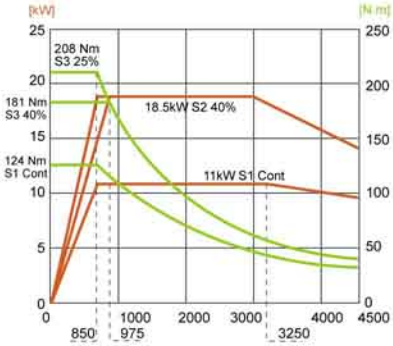

Low winding

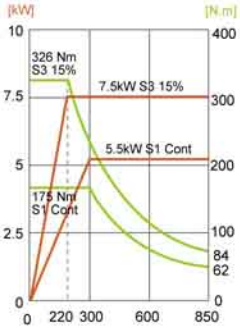

Spindle speed (rpm)

• TGL-20 Layout

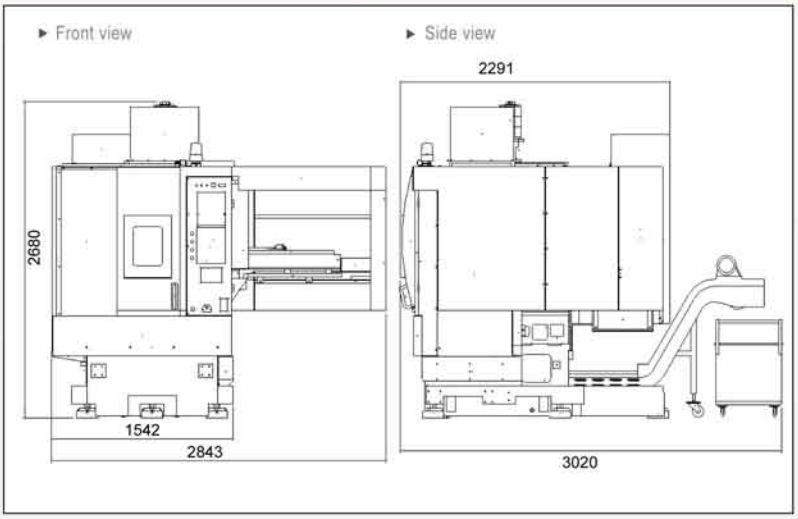

TGL-30 Spindle Output Diagram

Spindle power:30/22kW (50%ED/Cont.)
Max.speed: 3500min (rpm)

High winding

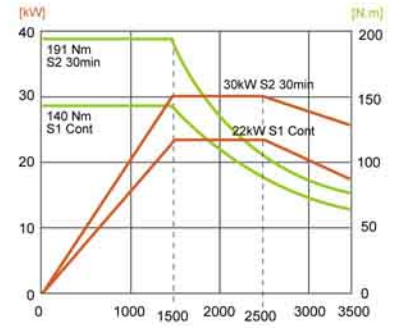

Low winding

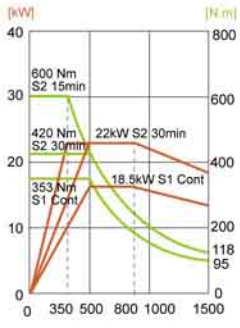

Spindle speed (rpm)

• TGL-30 Layout

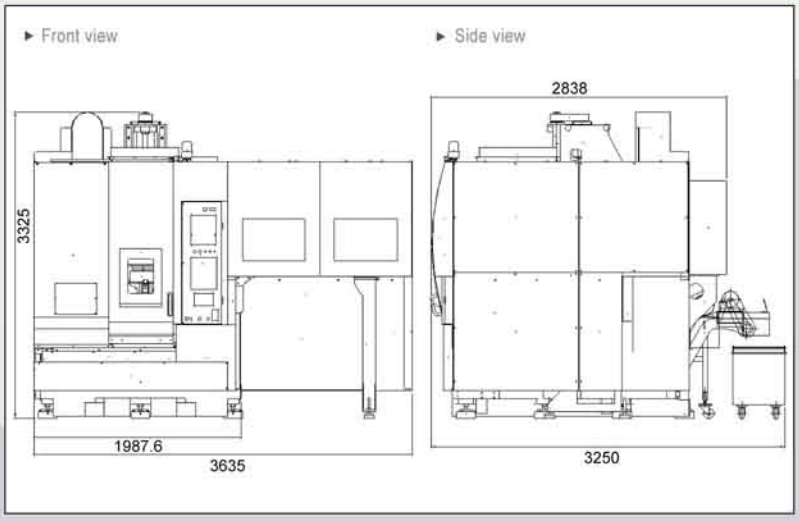

TGL-15/20/30 Standard Specifications

Item	Specification	Unit	TGL-15	TGL-15C	TGL-15D		TGL-20	TGL-30
					OP 10	OP 20		
CAPACITY	Max. Swing Diameter	mm	Ø300	Ø300	Ø300		Ø450	Ø650
	Max. Turning Diameter	mm	Ø100(Ø140)	Ø100	Ø100		Ø370(Loading Ø200)	Ø500(Loading Ø300)
	Max. Turning Length	mm	100	100	100		150	220
	Max. Machining Weight	kg	6(Ø100)/12(Ø140)	6	6		20	50
	Chuck Size	inch	6"(Opt. 8")	6"	6"(Opt. 8")		8"(Opt. 10")	10"(Opt. 12")
SPINDLE (BUILT IN MOTOR)	Spindle Speed	rpm	4500	4500	4500		4500	3500
	Spindle Nose		A2-5	A2-5	A2-5		A2-6	A2-8
	Through-Spindle Hole Diameter	mm	Ø35	Ø35	Ø35		Ø62	Ø80
	Spindle Motor	kW	7.5/5.5	7.5/5.5	7.5/5.5		18.5/11	30/22
	Spindle Diameter	mm	Ø90	Ø90	Ø90		Ø100	Ø130
TURRET	No. of Tool Stations	pcs	12	12	12	12(VDI)	12	12
	O.D. Tool Holder	mm	25×25	25×25	25×25	VDI30	25×25	25×25
	I.D. Tool Holder	mm	Ø32	Ø32	Ø32	VDI30	Ø40	Ø40
	Driving System		Servo Motor	Servo Motor	Servo Motor		Servo Motor	Servo Motor
FEED	X/Z Axis Rapid Traverse	m/min	36/36	36/36	30/30		30/30	30/30
	X Axis Servo Motor	kW	3.0	3.0	1.8		3.0	4.0
	Z Axis Servo Motor	kW	4.0	4.0	2.5		4.0	7.0
	X/Z Axis Stroke	mm	180+560/260	180+120/260	180+120/260		260+1050/370	300+1660/600
HYDRAULIC	Hydraulic Tank Capacity	liter	30	30	40		30	30
	Hydraulic Motor	kW	1.5	1.5	2.25		1.5	1.5
COOLANT	Coolant Tank Capacity	liter	120	120	220		125	210
	Coolant Motor	kW	0.78	0.78	0.37×2		0.37	0.37
MACHINE	L×W×H	mm	1680×1830×2405	1030×1750×2405	1780×1750×2400		2840×2070×2690	3640×2850×3330
	Weight	kg	3600	3600	5100		5000	9700

◎SPECIFICATIONS MAY BE CHANGED WITHOUT PRIOR NOTICE

Machine Dimensions

●TGL-15
●TGL-20
●TGL-30

■Top view

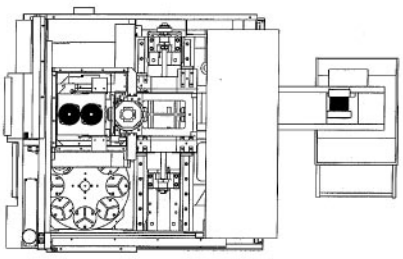

■Front view

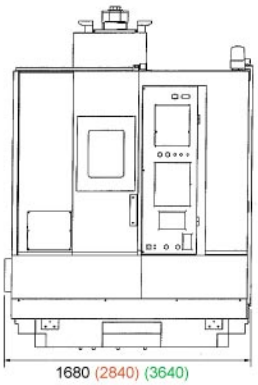

■Side view

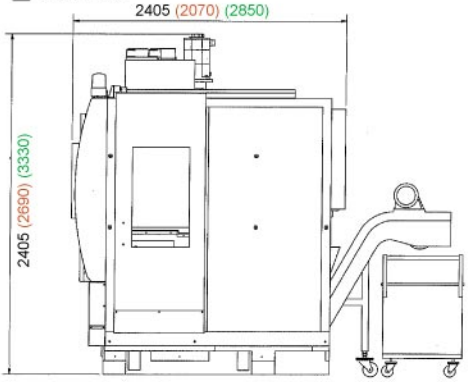

Tongtai Machine & Tool Co.,Ltd.

- HEAD OFFICE
  NO.3, LUKE 3rd. RD., LUZHU SHIANG, KAOHSIUNG COUNTY, 82151, TAIWAN.
  TEL：886-7-9761588 FAX：886-7-9761589/886-7-9761590
  Website：http://www.tongtai.com.tw
- TAOYUAN OFFICE TEL：886-3-4551399 FAX：886-3-4559730
- TAICHUNG OFFICE TEL：886-4-24720498 FAX：886-4-24720680
- TONGTAI SEIKI U.S.A INC. TEL：1-845-2675500 FAX：1-845-2675546
- EUROPE OFFICE TEL：31-161-454639 FAX：31-161-454768
- JAPAN OFFICE TEL：81-4-71438355 FAX：81-4-71438360
- THAILAND OFFICE TEL：66-2-7443440 FAX：66-2-3986518
- INDONESIA OFFICE TEL：62-21-45850521 FAX：62-21-45840522
- MALAYSIA OFFICE TEL：60-3-78456815 FAX：60-3-78456851
- CHINA OFFICE
  SHUZHOU TONG-YU MACHINE & TOOL CO., LTD.
  TEL：86-512-63430168 FAX：86-512-63431622
  E-mail：sales@tong-yu.com.cn
- SHANGHAI OFFICE TEL: 86-21-54421218 FAX: 86-21-34073262
- GUANGZHOU OFFICE TEL: 86-755-27222119 FAX: 86-755-27222115
- TIANJIN OFFICE TEL: 86-22-60896521 FAX: 86-22-60896593
- CHONGQING OFFICE TEL: 86-23-67865925 FAX: 86-23-67867717

2008.07.11 Design by Tongtai Machine & Tool Co.,Ltd.