Tongtai

Trust & Technology

Gang type CNC lathe

A-1500

Tongtai **Tongtai Machine & Tool Co., Ltd.**

Headquarters

No.3, Luke 3rd Rd., Luzhu Dist., Kaohsiung City 82151, Taiwan

TEL：886-7-9761588 FAX：886-7-9761589

www.tongtai.com.tw

Taoyuan Branch	TEL：886-3-4551399	FAX：886-3-4559730
Taichung Branch	TEL：886-4-23589600	FAX：886-4-23589993
Japan Branch	TEL：81-4-71438355	FAX：81-4-71438360
Europe Branch	TEL：31-161-454639	FAX：31-161-454768
Romania Branch	TEL：40-264-415273	FAX：40-264-403983
Malaysia Branch	TEL：603-78597113	FAX：603-78597115
Vietnam Branch	TEL：84-4-62766090	
Thailand Branch	TEL：66-2-7443440	FAX：66-2-3986518
Indonesia Office	TEL：62-21-45850875	FAX：62-21-45850876

China Operation Center

Shuzhou Tong-yu Machine & Tool Co., Ltd.

No.555 Huahong Rd., Economic Development Zone of Wujiang,
Suzhou City, Jiangsu Province, China

TEL：86-512-63430168

FAX：86-512-63431622

E-mail：sales@tong-yu.com.cn

Wuhan Branch	TEL：86-27-59409109	FAX：86-27-59409110
Chongqing Branch	TEL：86-23-67865925	FAX：86-23-67867717
Guandong Branch	TEL：86-755-27222119	FAX：86-755-27222115
Tianjin Branch	TEL：86-22-24417640	FAX：86-22-24416738
Shanghai Office	TEL：86-21-24208138	FAX：86-21-34073262
Shenyang Office	TEL：86-24-24142968	FAX：86-24-24115782

Affiliates

Honor Seiki Co., Ltd.	Asia Pacific Elite Corp.	Quick-Tech Machinery Co., Ltd	PCI-SCEMM - rue Copernic	ANGER Machining GmbH
TEL : 886-7-9759888	TEL : 886-4-23589313	TEL : 886-6-3841155	TEL : 33-4-77426161	TEL : 43-7229-71041-0
FAX : 886-7-9759999	FAX : 886-4-23588913	FAX : 886-6-3841177	FAX : 33-4-77426023	FAX : 43-7229-71041-199
www.honorseiki.com.tw	www.apeccnc.com	www.quicktech.com.tw	www.pci.fr	www.anger-machining.com

A-1500 2016.05.16

www.tongtai.com.tw

A-1500

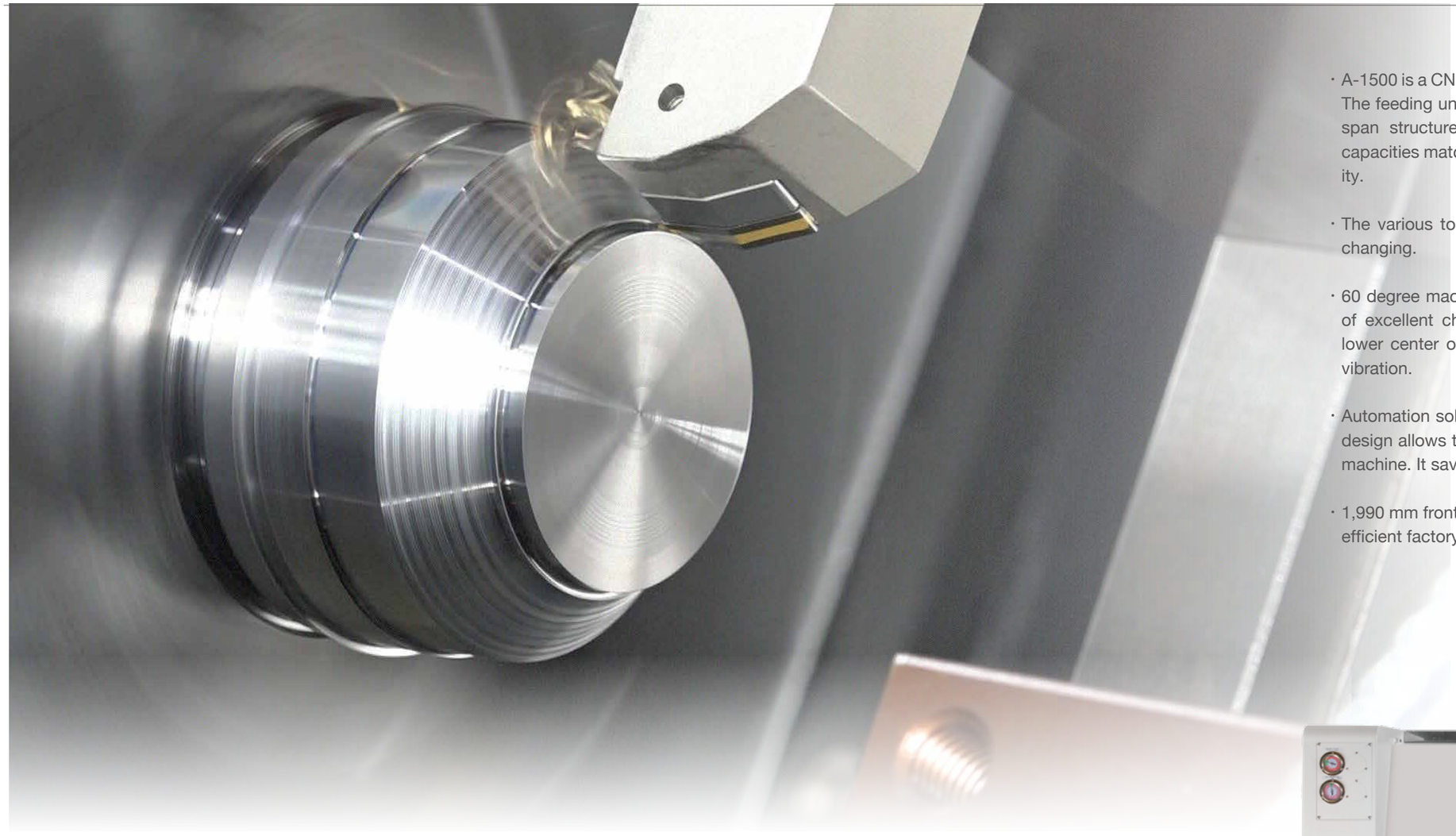

- A-1500 is a CNC lathe with the chuck specification of 6” and 8”. The feeding unit adopts high rigidity linear guideway and wide span structure design. Its fast and outstanding machining capacities match the requirements of high efficiency productivity.
- The various tool holders design allows to process rapid tool changing.
- 60 degree machine bed structure design remains the features of excellent chip disposal and friendly operating. Moreover, lower center of gravity design benefits minimizing machining vibration.
- Automation solutions are available and spacious working area design allows the robotic arm to turnover the workpiece in the machine. It saves the loading/unloading time.
- 1,990 mm frontal width with rear chip disposal design provides efficient factory utility.

CONTENTS

03 Main structure
05 Machining capacity
06 Tool system
07 Operator convenience
Standard/ Optional accessories
08 Automatic system applications
09 Spindle output and torque chart
Machine dimensions
10 Specifications

Main specifications

Spindle	Spindle 4,800 rpm Ø80
	Spindle 4,500 rpm Ø100 (Opt.)
X/Z axis	Rapid traverse 30/30 m/min
	Travel 320/400 mm
	X/Z axis adopts high quality linear guide-ways and ballscrews.

Main structure

- High speed and high reliability
- Small frontal width, long travel, and high loading capacity
- Suitable for various parts machining
- Outstanding cost-performance ratio
- Stable cutting performance and machining precision
- High efficiency productivity and quality stability

Specification

Travel
X/Z 320 / 400 mm

Rapid traverse
X/Z 30 / 30 m/min

Working area

Unit:mm

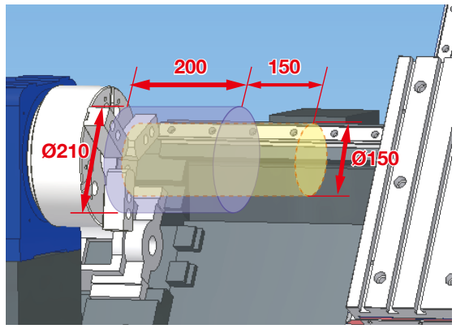

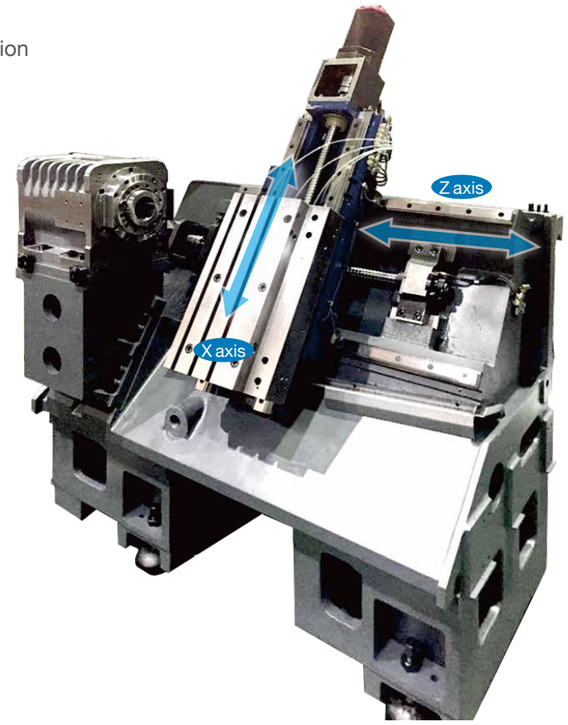

Stable structure design

The feeding unit adopts high rigidity linear guideway with wide span structure design. Its fast and outstanding machining capacities match the requirements of high efficiency productivity.

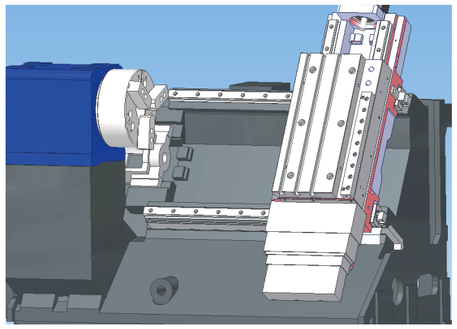

High speed transmission system

X/Z axis adopts linear guideway and ballscrew designs and has the features of high rigidity, low friction, and low noise. Furthermore, it benefits achieving the performance of rapid displacement.

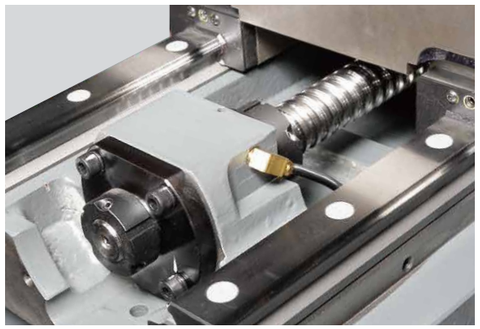

Finite Element Analysis optimization

Through the results of FEA, the machine structure and ribs are optimized.

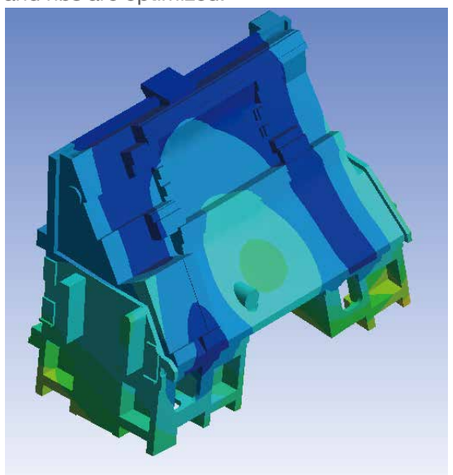

High efficiency chips disposal

60 degree slant machine bed structure design benefits chips disposal.

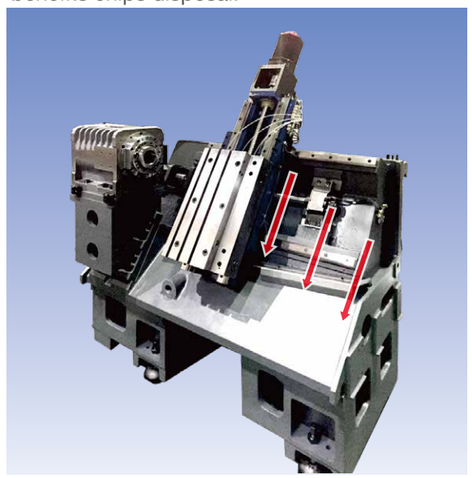

High precision spindle

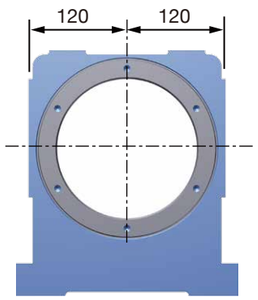

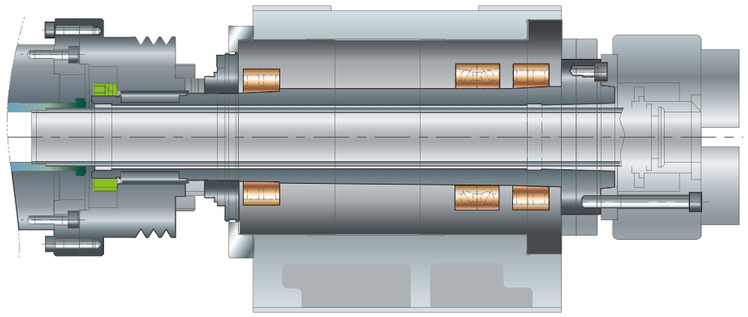

- Spindle's gear box adopts symmetrical design to avoid unbalanced thermal deformation. Furthermore, the internal spindle uses 2 pairs of roller bearings and a pair of angular ball bearings to provide excellent rigidity and ensure the accuracy in high-speed machining.
- Sleeve type spindle structure improves conveniences for setup and maintenance. Whole sleeve structure is able to be changed in the shortest time for minimizing the shutdown time.

Item	Standard equipped	Optional equipped
The diameter of spindle	Ø80 mm	Ø100 mm
Chuck size	6"	8"
Max. speed	4,800 rpm	4,500 rpm
Spindle motor	12/11/7.5 kW	
Output torque	91/62/43.2 Nm	
Driven method	Belt driven	

Machining capacity

Working area

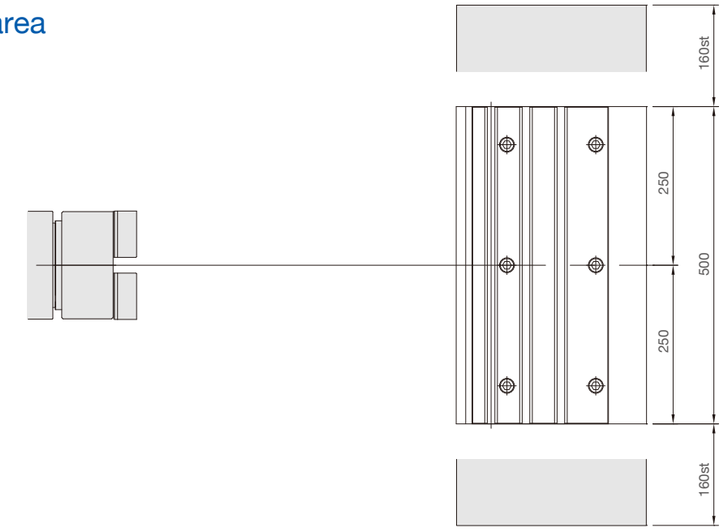

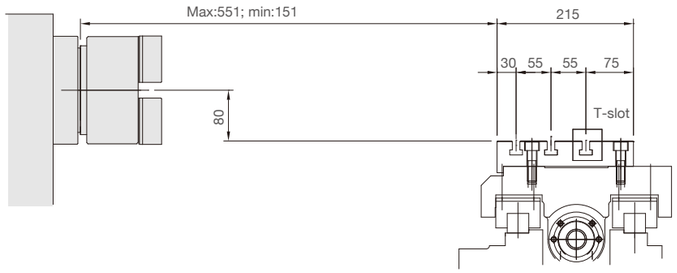

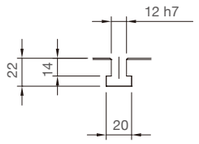

T-slot (1:2.5)

Machining capacity Material: S45C

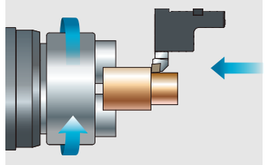

O.D. turning	
Material removal rate	192 cm^3/min
Cutting depth	4 mm
Spindle speed	1,194 rpm
Feedrate	0.3 mm/rev
Cutting speed	120 m/min

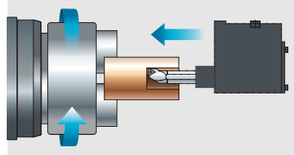

I.D. turning	
Material removal rate	173 cm^3/min
Cutting depth	4 mm
Spindle speed	1,194 rpm
Feedrate	0.3 mm/rev
Cutting speed	120 m/min

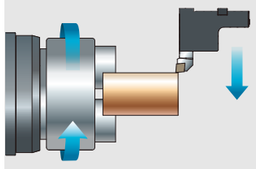

Facing	
Material removal rate	143 cm^3/min
Cutting depth	4 mm
Spindle speed	1,194 rpm
Feedrate	0.3 mm/rev
Cutting speed	120 m/min

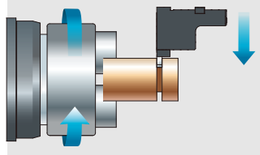

Grooving	
Cutting width	6 mm
Spindle speed	776 rpm
Feedrate	0.1 mm/rev
Cutting speed	120 m/min

※The data is provided for reference. Different tools and motors will influence the results.

Tool system

Tool system

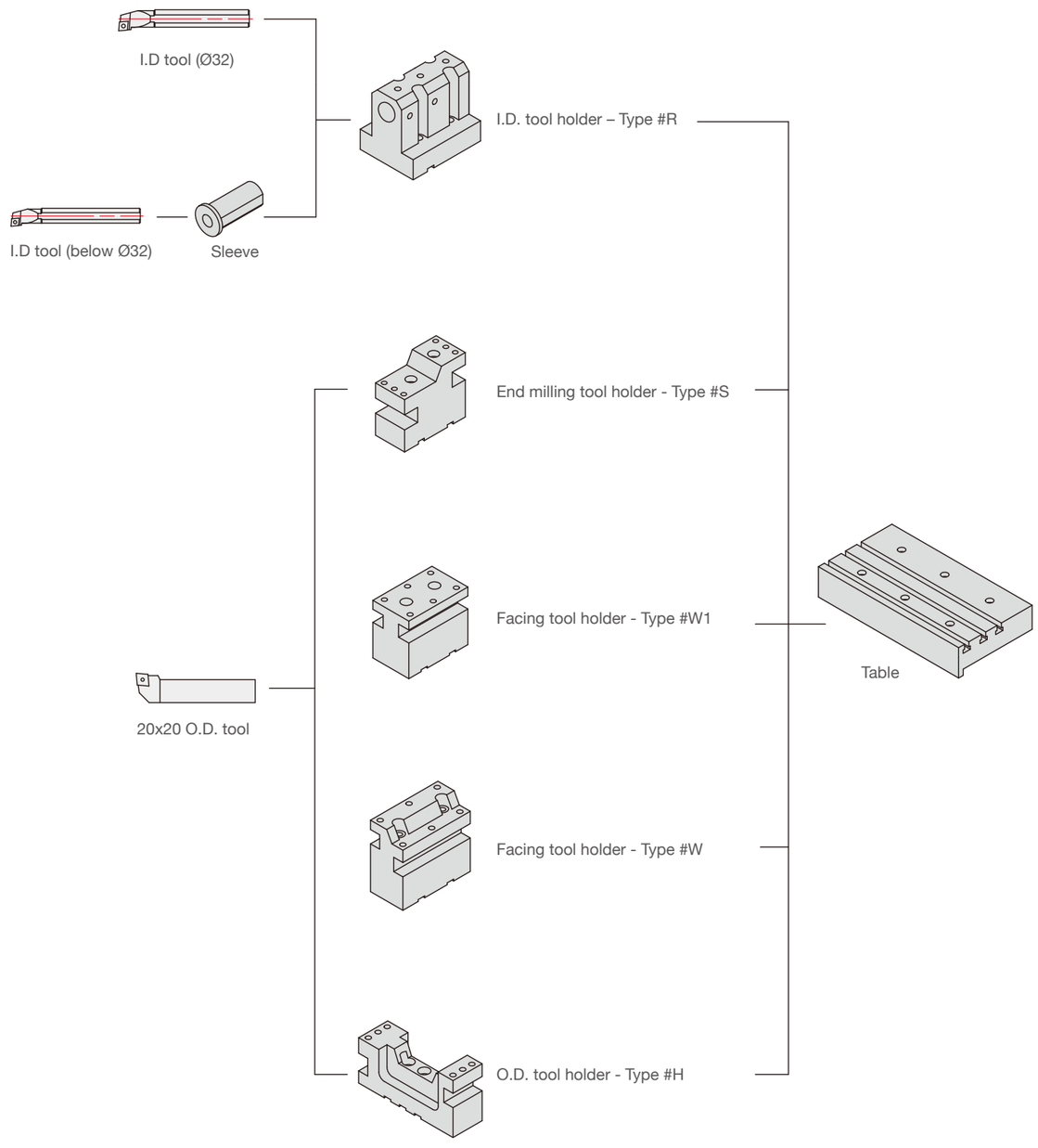

Operator convenience · Std./ Opt. accessories

Ergonomic design

Friendly operating height and the distance from operator to workpiece is only 375 mm.

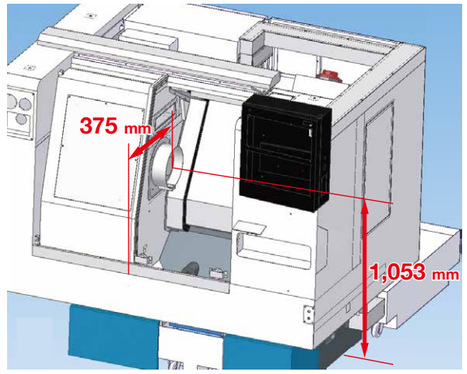

Easy daily maintenance

Controls are on the side panel to facilitate maintenance.

Standard/ optional accessories

Item	Std.	Opt.	Item	Std.	Opt.	Item	Std.	Opt.
The diameter of spindle Ø80	●		Safety door interlock	●		Air gun set	●	
The diameter of spindle Ø100		○	Disc type oil skimmer		○	Coolant gun set		○
6” chuck (MIT)	●		Hinge type chip conveyor	●		Coolant through spindle (C.T.S.)		○
6” chuck (MIT)		○	Scraper type chip conveyor		○	Automotive cut-off system		○
Roller guideway		○	Magnetic scarper type chip conveyor		○	A/C for electrical cabinet		○
Linear scale		○	Automatic door		○	CE marking		○
Machine bed flushing system	●		A/C for electrical cabinet		○			
Air blower	●		Transformer/ Stabilizer		○			

Oil-mist collector

A/C for electrical cabinet

Bar feeder

Tri-color light

Automatic loading

Collet chuck

Transformer

Torque clutch

Oil skimmer

Automatic unloading

Automatic system applications

Multi-joint robotic arm

Automation solutions are available and spacious working area design allows the robotic arm to turnover the workpiece in the machine. It saves the loading/unloading time.

《Operating diagram》

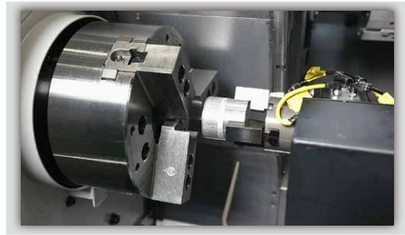

Max. swing diameter of loading/unloading.

Unit:mm

Gantry type robotic arm

Both axes process perpendicular movement and are driven by servo motors. In addition, the programmable robotic arm is able to process rapid movements and make positioning point adjustments by different shapes.

X/Y axis rapid traverse : 120/120 m/min

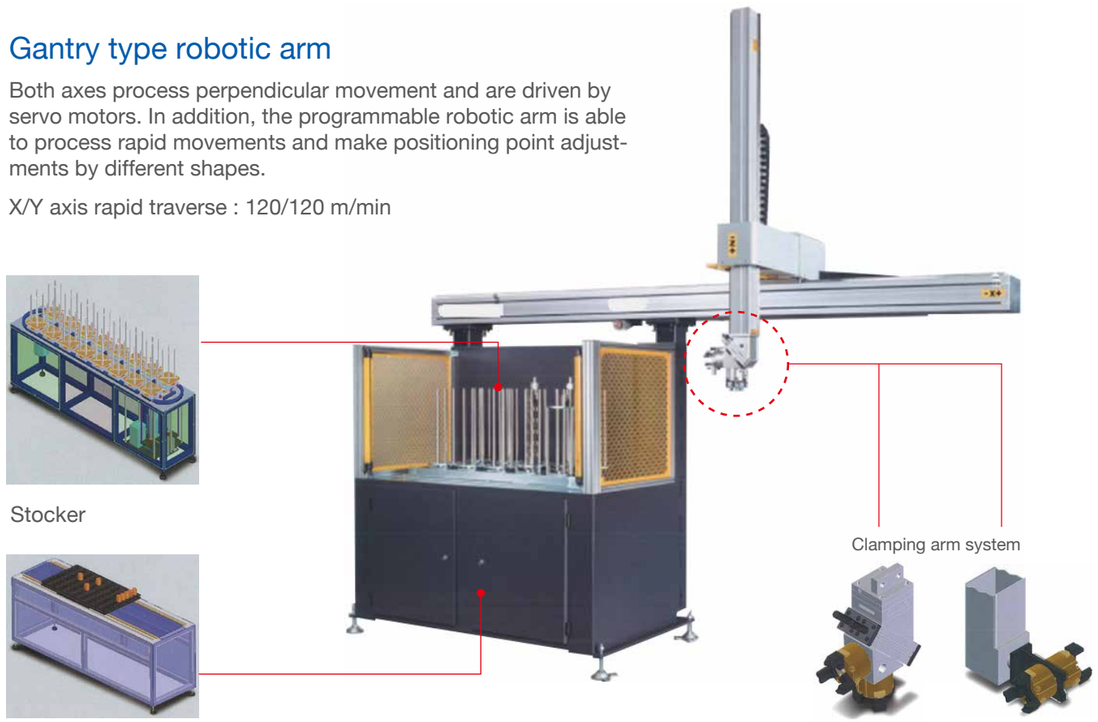

Spindle output and torque chart · Machine dimensions

Spindle output and torque chart

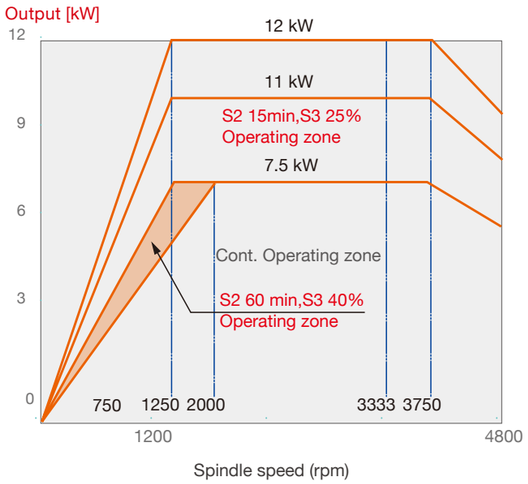

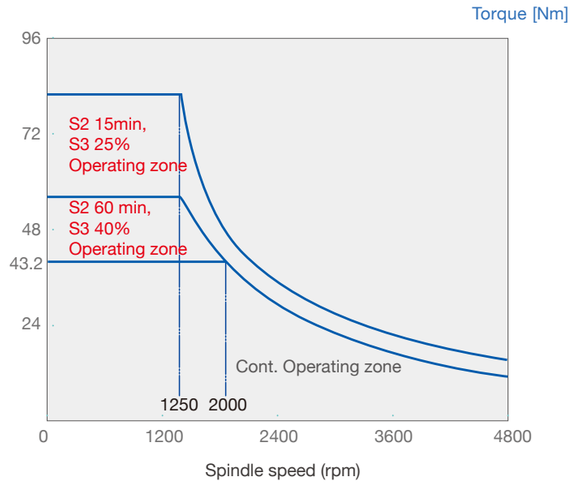

Machine size

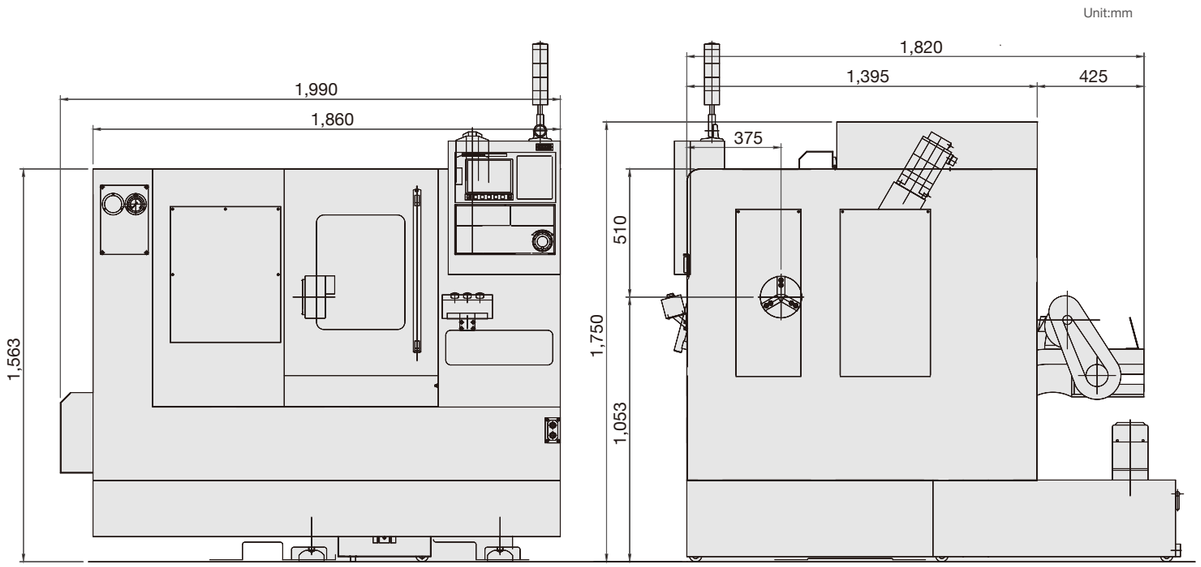

Specifications

Item	Unit	Specification
Max. swing diameter	mm	Ø300
Max. turning diameter	mm	Ø150
Max. turning length	mm	350
Bar capacity	mm	Ø44 (Opt. Ø51)
Spindle speed	rpm	4,800 (Opt. 4,500)
Spindle nose		A2-5 (Opt. A2-6)
Through-spindle hole diameter	mm	Ø56 (Opt. Ø66)
Spindle bearing inner diameter	mm	Ø80 (Opt. Ø100)
Spindle motor	kW	12/11/7.5
Tool type		Gantry type
Tool capacity	pc	2~5(Depends on workpiece)
O.D. tool holder	mm	□ 20
I.D. tool holder	mm	Ø32
X/Z axis rapid traverse	m/min	30/30
X/Z turning feedrate	mm/min	0.001-5,000
X/Z turning travel	mm	320/400
Hydraulic tank capacity	L	12
Hydraulic motor	kW	0.75
Coolant tank pump	kW	Tool:1.1 / Machine bed:0.37
Coolant tank capacity	L	150
Controller		FANUC 0i-TF
Machine size (LxWxH)	mm	1,990×1,820×1,750
Machine weight	kg	2,450

©Specifications may be changed without prior notice.